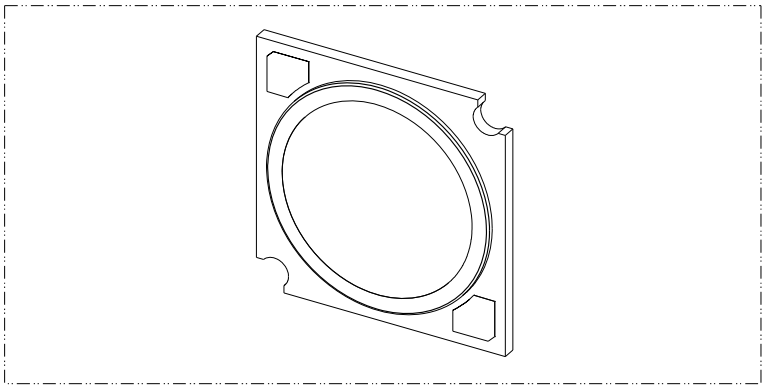

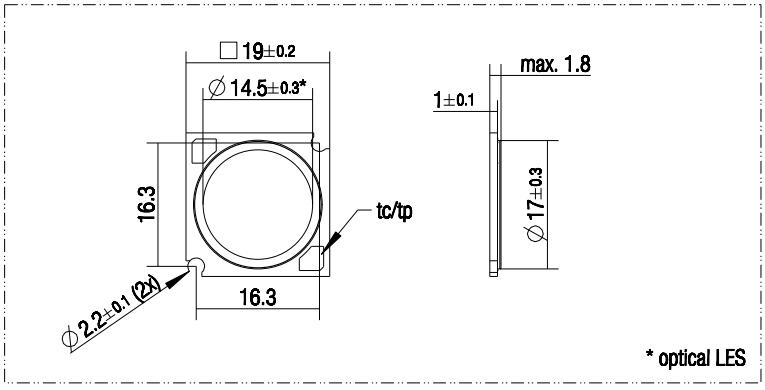

Issue no.	Issue date	Issue by	Issue chked. by	Issue text

Gen. tolerance: EN 22768 mK	Sheetm. part tol.: DIN 6930-2 m	Plastic part tol.: DIN 16742
Surface treatment/aftertreatment: -		
Project: -	Basic material: -	
Name: B.Fink	Description	
Date: 22.03.2022	DATA MEC 19.0x19.0 SLE-SNC8-LES15-MODULE	
Chked. by: -	-	
Chked. date: -	Copyright according to ISO 16016	

Info.: -	
Scale: 1:1	Projection
Size: A4	
Document 16212203	I 00

TRIDONIC